STELLAR WATERWORKS

SUBMERSIBLE COSMIXERS TECH DATA SHEET

WOW & UFO MIXER SPECIFICAITONS	
Power Requirements	115 V, 60 Hz, 1 Ph, 20-Amp Circuit (additional power options available)
Power Draw	~7.9 Amps, Full-Load 845 Watts
Motor Type	4" Submersible Motor, 0.5 HP, 1 Phase, 115 Volts, 2 Wire
Control Panels	SCADA HOA connections available through RS-485, standard on/off box available also
RPM	3450
Shipping Weight	75 pounds
Frame Material	316 Stainless Steel, NSF approved material for potable drinking water
Certification	Pump and motor certified NSF/ANSI 61 & 372, all other components approved to these standards
Minimum Operating Depth	At least 24" minimum water depth
Warranty	5 year limited warranty
Special Standpipe Cosmixers	Open bottom flow sleeve available upon request for tall standpipe applications

Phone
888-976-3444

Email
info@stellarwaterworks.com

Website
www.stellarwaterworks.com

SUBMERSIBLE COSMIXERS TECH DATA SHEET

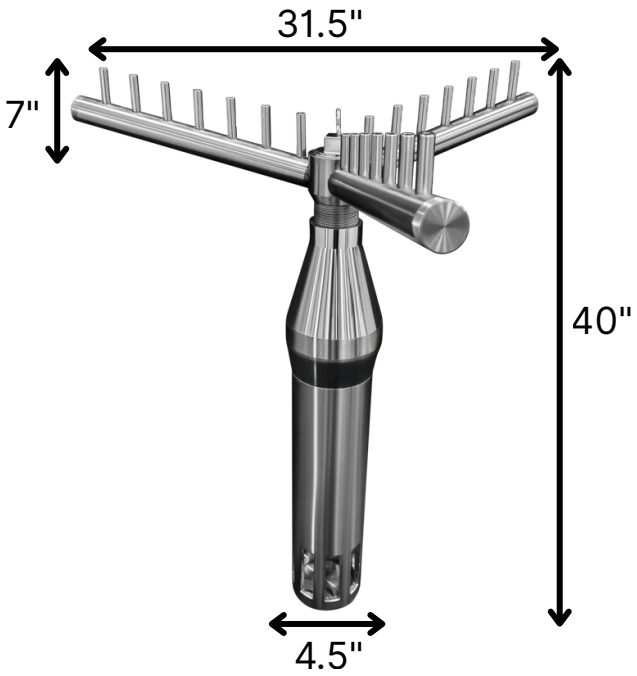

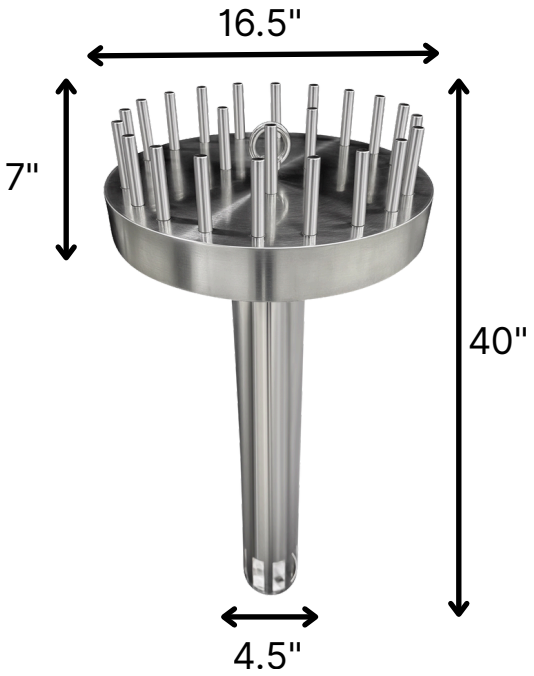

	WOW MIXER	UFO MIXER
Dimensions	40" H X 31.5" W	40" H X 16.5" W
Number of 4" Nozzles	21	23

Includes a 75-ft, 10-AWG power cable for termination inside a junction box located at the top of the tank. Junction box is included. A sealed penetration fitting is provided, consisting of a T316 stainless steel tank fitting and cord grip for watertight cable entry through the tank roof. The system is designed for roof-mount or vent-mount installation only (no sidewall penetration). Fits through hatches and vents as small as 18 inches An installation kit with chain is included, allowing deployment through the roof without tank entry or removal of the potable water tank from service.

February 9th, 2026

Phone
888-976-3444

Email
info@stellarwaterworks.com

Website
www.stellarwaterworks.com